DC HIGH VOLTAGE Bi-directional
SWITCHING RELAY

EVHB500

(H: 1500V Class)

▶ 응용분야 (Application) : Electric Vehicle, Charging System, Battery Energy Storage System, Solar System, etc. Bi-directional switching systems and AC systems

▶ 코일정격 (Magnet coil ratings)

Nominal voltage(V)	Item	Inrush Coil current 100ms (Max.)	Holding Coil current	Pick-up voltage (V)max.	Drop-out voltage (V)min.	Holding voltage (V)min.	Max. voltage (V)
B	72	1.3A	0.08A	32VDC	18VDC	22VDC	95VDC
	60	1.1A	0.08A				
	36	1.0A	0.12A				
A	36	3.8A	0.10A	9VDC	6VDC	7.5VDC	36VDC
	24	1.8A	0.16A				
	12	1.4A	0.35A				
12		1.4A	0.32A	9VDC	6VDC	7.5VDC	18VDC
24		1.1A	0.16A	18VDC	12VDC	13.5VDC	32VDC

Notes : 1. Nominal current and coil resistance are measured at +20℃. 2. Differences of coil resistance are ±10%. 3. Performance characteristic coil temperature is measured at +20℃.

▶ 접점정격 (Contact ratings)

Item / Type	1Pole Resistor load	
	EVHB500	
Continuous current (wire size 325㎟)	500A	
Max. switching current	750VDC 500A	UL Certification
	1000VDC 300A	
	1500VDC 100A	
Max. switching voltages	1500VDC / 1000VAC	
Contact Rating switching voltages	12 to 1500VDC / 1000VAC	
Voltage drop across contacts per 100A	30mV Max. (At 5VDC)	
Min. permissible load	12VDC 0.5A	
Description	S.P On/Off (a)	
Contact Arrangement, auxiliary contacts	1Form A (SPST-NO.)	
General Aux. Contact Current, Max.	2A 30VDC / 3A 125VAC	
General Aux. Contact Current, Min.	100mA 8VDC	
Gold alloyl Aux. Contact Current, Max.	0.1A 30VDC / 0.1A 30VAC	
Gold alloyl Aux. Contact Current, Min.	1mA 5VDC / 1mA 5VAC	

▶ 주문방법 (Ordering information)

EVH **B** 500 A - A S /G

- EVH: Type 1500Vdc Class
- B: Bi-directional switching device
- 500: 500(A)
- A: A : With Aux. Contact / Blank : Without Aux Contact
- A: A=Coil Voltage (12 to 36VDC) / B=Coil Voltage (36 to 72VDC) / 12=Coil Voltage (12VDC) / 24=Coil Voltage (24VDC)
- S: S : Basic Type
- /G: Blank : General Aux. Contact / /G : Gold alloy Aux. Contact

Permissible load of Aux. contact

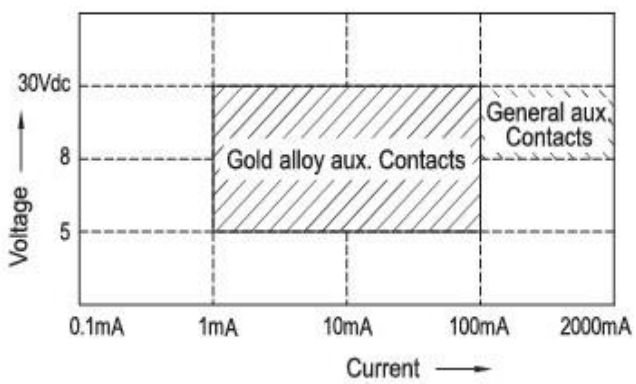

DC HIGH VOLTAGE Bi-directional
SWITCHING RELAY

EVHB500

(H: 1500V Class)

성능 (Characteristics)

Expected life	Mechanical (Min.)		5×10^5
	Electric (Min.) (Resistor)	750VDC(+),(−) 500A	1×10^3
		1000VDC(+),(−) 300A	1×10^3
		1500VDC(+),(−) 100A	1×10^3
Initial insulation resistance			Min. 100mΩ 500VDC
Initial breakdown voltage	Between open contacts		4500VAC 60 Sec. 5mA
	Between contacts & coil		4500VAC 60 Sec. 5mA
Operate time (at 20℃)			Max. 40㎳
Release time (at 20℃)			Max. 10㎳
Shock resistance	Functional		Min 196 ㎧ {20G}
	Destructive		Min 490 ㎧ {50G}
Vibration resistance	Functional		196 ㎧ {20G} 80 to 2000Hz
	Destructive		196 ㎧ {20G} 80 to 2000Hz
Conditions for operation transport and storage	Ambient temperature		−40℃ to +85℃
	Humidity		5 to 85% R.H.
Unit weight			980g

특성곡선 (Reference data)

● 온도상승곡선

• 통전시간의 최대치 Max. Current capacity
Max. Continuous thermal current rating (amperes)

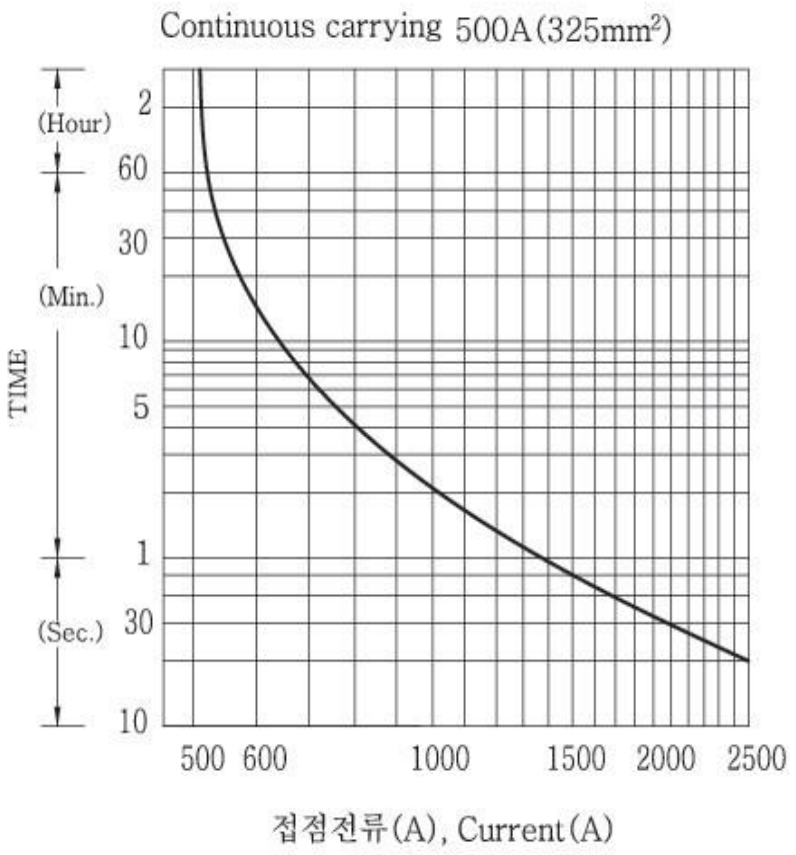

● 전기적 수명 곡선
(Estimated Switching Ratings)

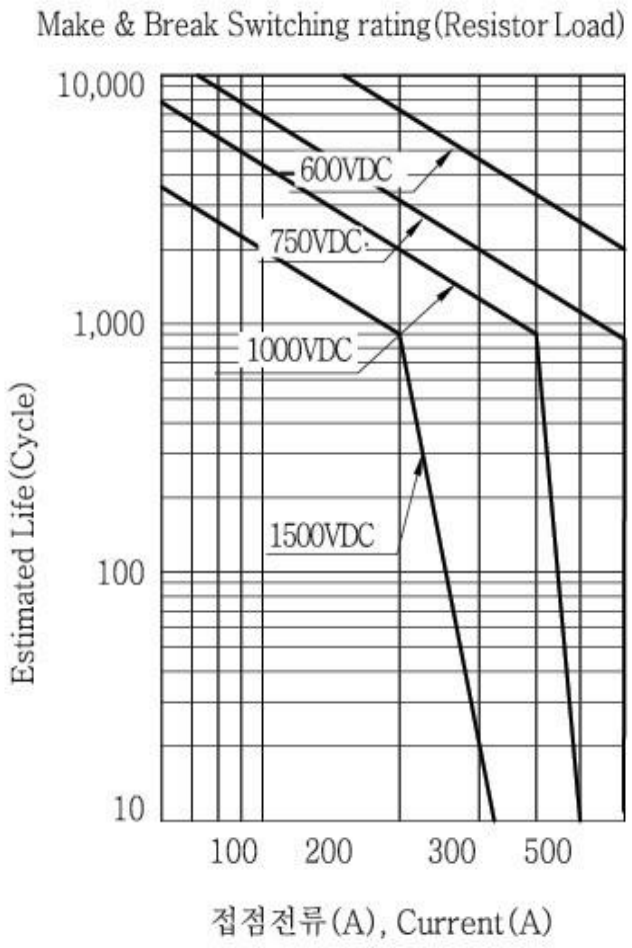

DC HIGH VOLTAGE Bi-directional
SWITCHING RELAY

EVHB500

(H: 1500V Class)

공차(Tolerance) : 10mm 이하±0.3, 10~50mm ±0.6, 50mm 이상±1.0

▶ 외형치수도 (Dimension in mm)

(Basic Type)

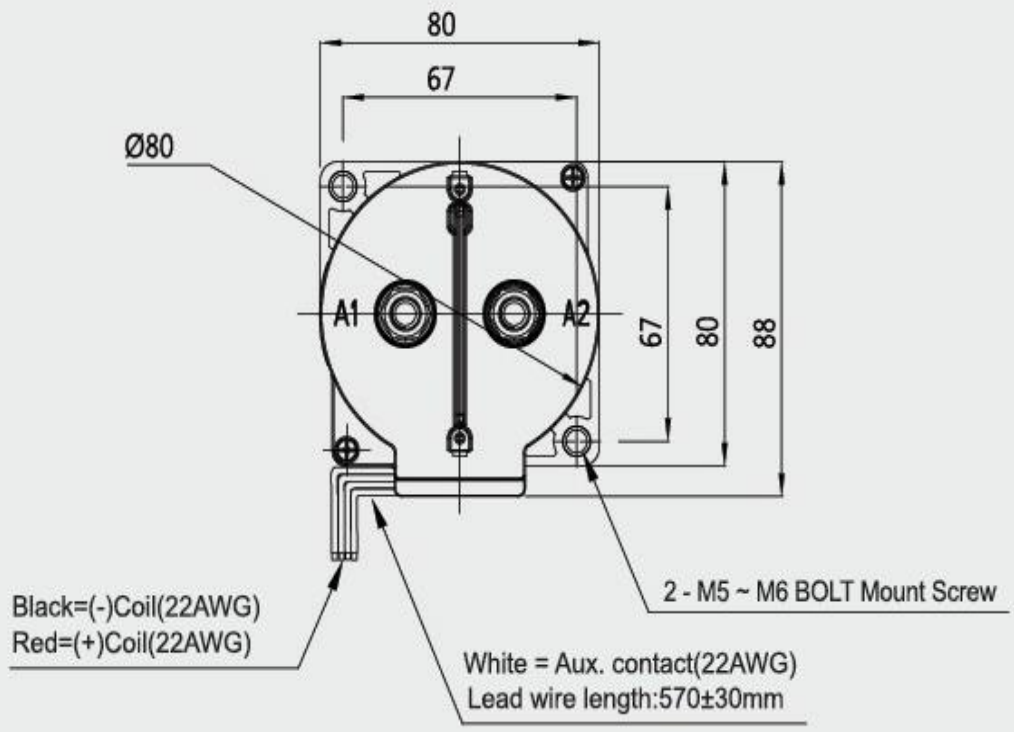

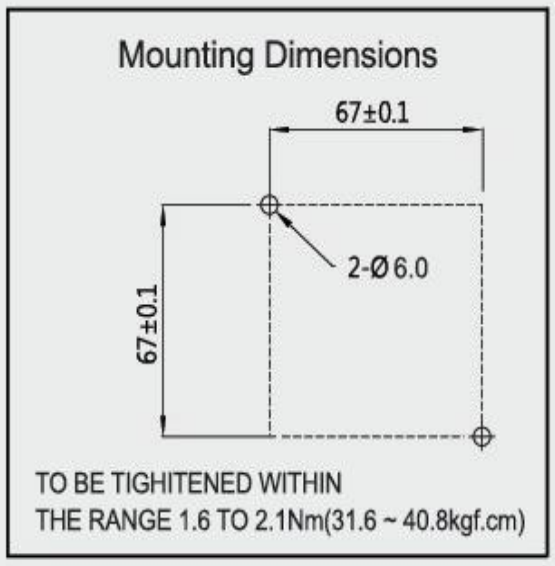

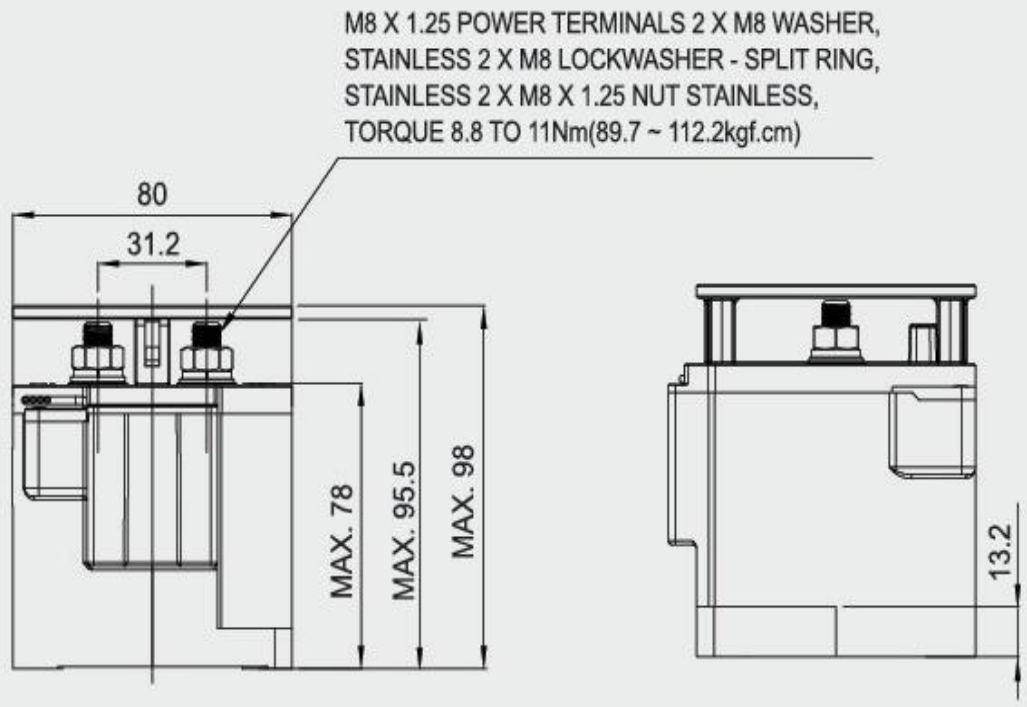

Schematic (Top View)

EVHB500 don't have polality
on the main contacts

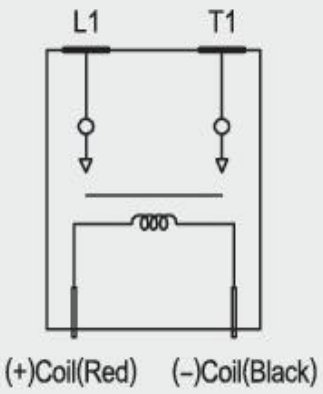

▶ 응용 회로 (Application Circuit)

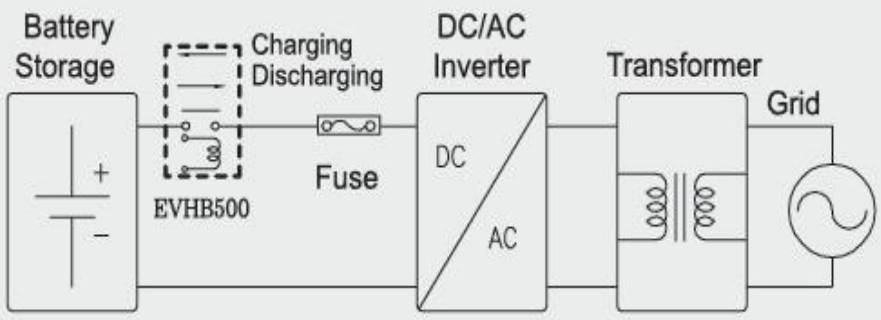

Battery Energy storage Systems

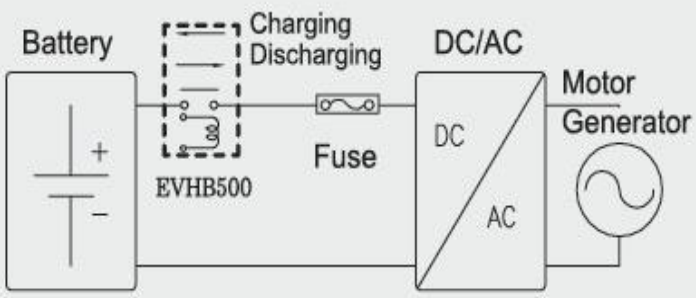

Electric Vehicles